TEAR SHEET

Go Lightly 54" Two Light Linear Chandelier

Item # BBL 5085G-G

Designer: Barbara Barry

O/A Height: 60.5"
Fixture Height: 15.5"
Min. Custom Height: 21.5"
Width: 54"
Canopy: 4.75" Round
Finishes: BZ, CW, G, PN, SB
Shade Treatments: BZ, CW, G, L, PN, SB
Shade Details: 5.5" x 6" x 7"
Socket: 2 - E12 Candelabra
Wattage: 2 - 6.5 LED B11
Weight: 11 Pounds

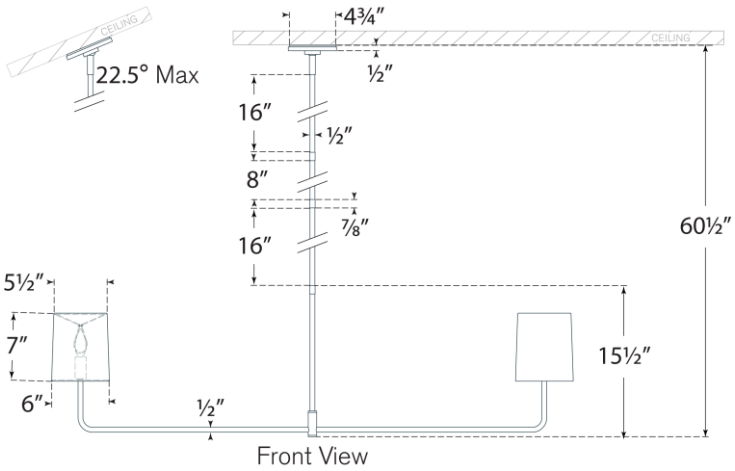

Top View

VISUAL COMFORT & CO.

DAMP LED 4