TEAR SHEET

Kokomo 30" Table Lamp

Item # CHA 8745CLW/PN-L

Designer: Chapman & Myers

Height: 30.25"

Width: 20.5"

Base: 7" Round

Finishes: ASW/AB, CLW/PN, CRW/BZ

Shade Treatments: L

Shade Details: 9.5" x 20.5" x 14"

Socket: E26 Dimmer

Wattage: 15 LED A19

Weight: 10 Pounds

Note: Rattan is a natural material | Variations in color tones are expected

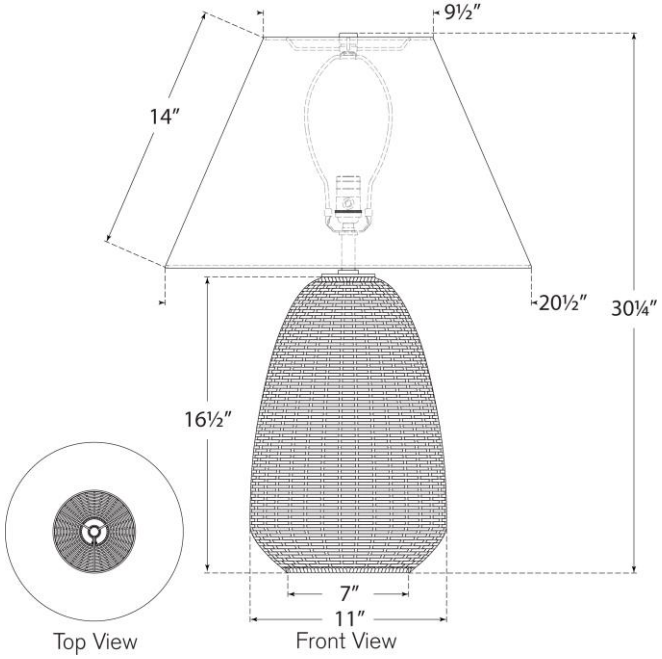

VISUAL COMFORT & CO.