TEAR SHEET

Country Industrial Small Pendant

Item # CHC 5133BZ-WG

Designer: Chapman & Myers

O/A Height: 57"

Min. Custom Height: 30.25"

Width: 14"

Canopy: 5.25" Round

Finishes: AB, AN, BZ, PN

Shade Treatments: AB, AN, BZ, PN, WG

Shade Details: 9.5" x 14"

Socket: E26 Keyless

Wattage: 100 A19

Weight: 21 Pounds

Note: Custom Height Available

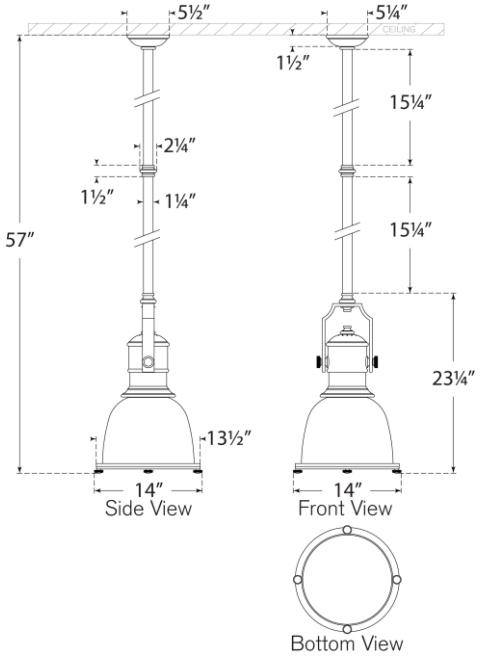

VISUAL COMFORT & CO.