TEAR SHEET

Larkin 7" Conical Pendant

Item # IKF 5454PN-CG

Designer: Ian K. Fowler

O/A Height: 64.75"
Fixture Height: 21.5"
Min. Custom Height: 28.25"
Width: 7"
Canopy: 6" Round
Finishes: HAB, PN
Glass Options: CG
Lightsource: Dedicated LED
Wattage: 12w (1400lm)
Weight: 11 Pounds
Note: Custom Height Available

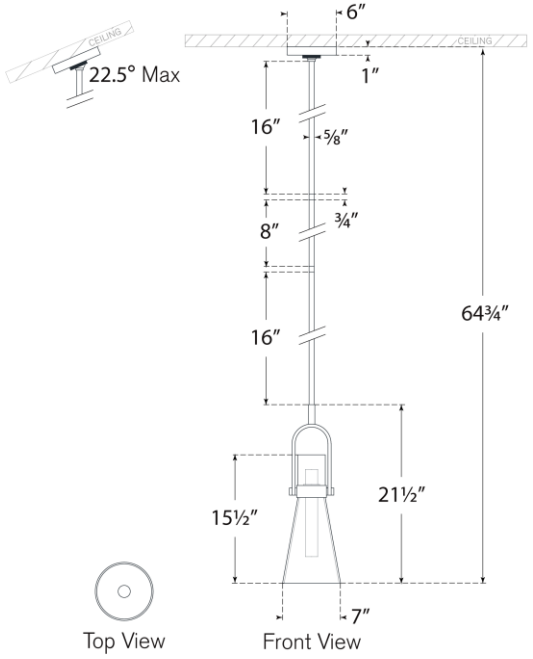

VISUAL COMFORT & CO.

DAMP LED 4