TEAR SHEET

Lorino 17" Tapered Lantern

Item # JN 5260HAB-WG

Designer: Julie Neill

O/A Height: 68"
Fixture Height: 26"
Min. Custom Height: 32.5"
Width: 17"
Canopy: 5.5" Square
Finishes: HAB, MI, PN
Glass Options: WG
Socket: E26 Keyless
Wattage: 15 LED A19
Weight: 15 Pounds
Note: UL Only | Custom Height Available

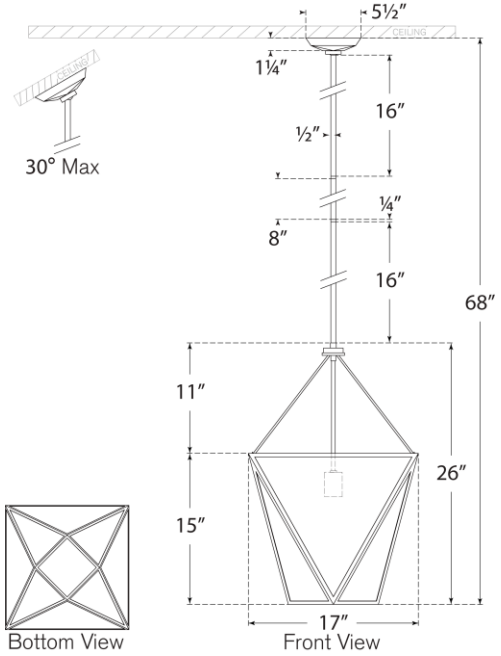

VISUAL COMFORT & CO.