TEAR SHEET

Utopia 5" Pendant

Item # KW 5038G

Designer: Kelly Wearstler

O/A Height: 64.5"

Fixture Height: 20"

Min. Custom Height: 26.5"

Width: 5"

Canopy: 4.5" Round

Finishes: AI, G, PN

Lightsource: Dedicated LED

Wattage: 15w (1200lm)

Weight: 5 Pounds

Note: Custom Height Available

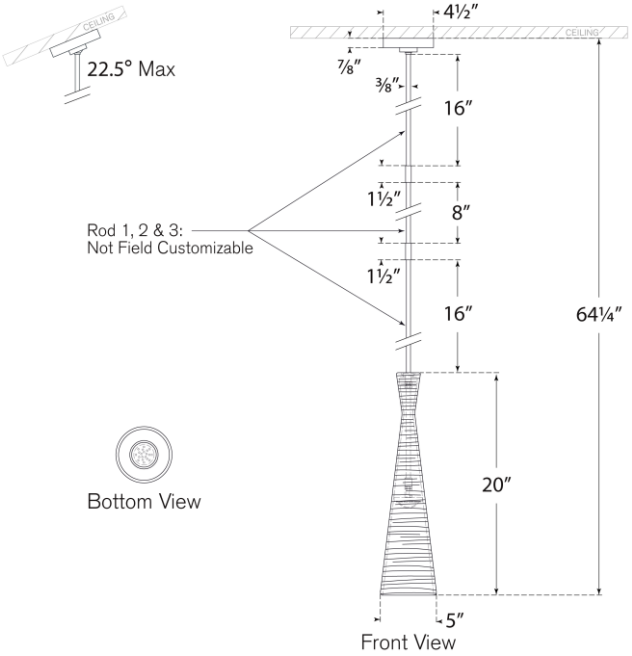

VISUAL COMFORT & CO.

DAMP LED 4