TEAR SHEET

Morris Medium Lantern

Item # SK 5009GI-WG

Designer: Suzanne Kasler

Height: 26"
Width: 19.75"
Canopy: 4.75" Round
Finishes: AZ, GI, PN
Glass Options: CG, FG, WG
Socket: 3 - E12 Candelabra
Wattage: 3 - 60 C11
Weight: 23 Pounds

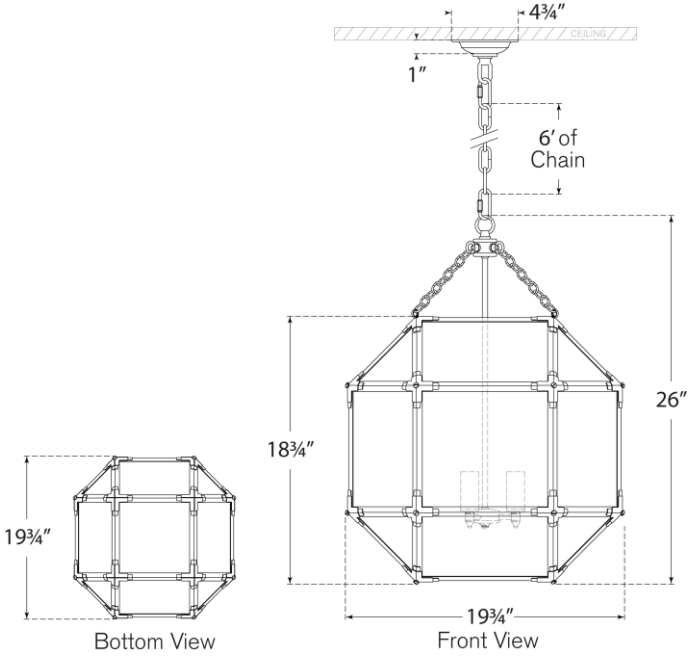

VISUAL COMFORT & CO.