TEAR SHEET

Emerson 23" Pendant

Item # SK 5384HAB-ERT

Designer: Suzanne Kasler

Height: 11.75"

Width: 22.75"

Canopy: 5.25" Round

Finishes: BZ, HAB, PN

Shade Treatments: ART, ERT, NRT

Socket: E26 Keyless

Wattage: 15 LED A19

Weight: 11 Pounds

Note: Rattan is a natural material | Variations in color tones are expected

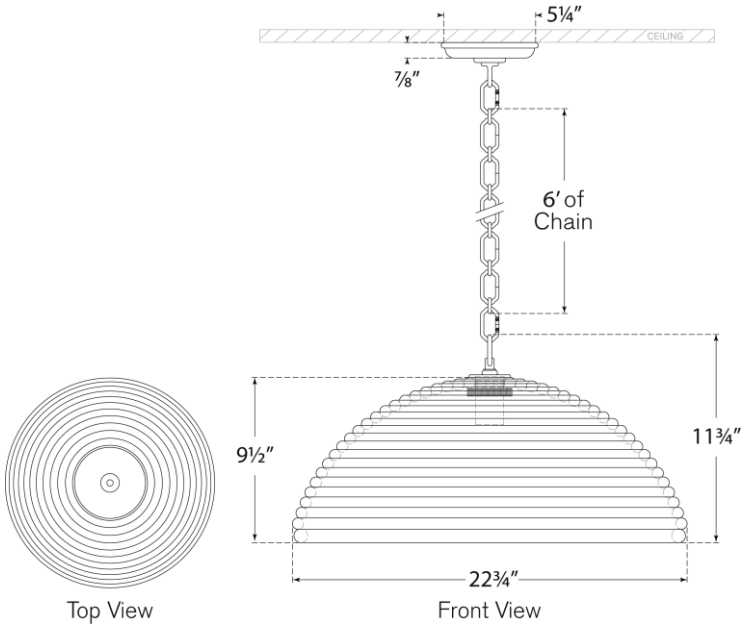

VISUAL COMFORT & CO.