TEAR SHEET

Katie Small Globe Sconce

Item # TOB 2225PN/G4-CG

Designer: Thomas O'Brien

Height: 12.75"
Width: 6.25"
Extension: 8.75"
Backplate: 5" Round
Finishes: BZ, HAB, PN
Glass Options: CG, SG, WG
Socket: E12 Candelabra
Wattage: 40 C11
Weight: 4 Pounds

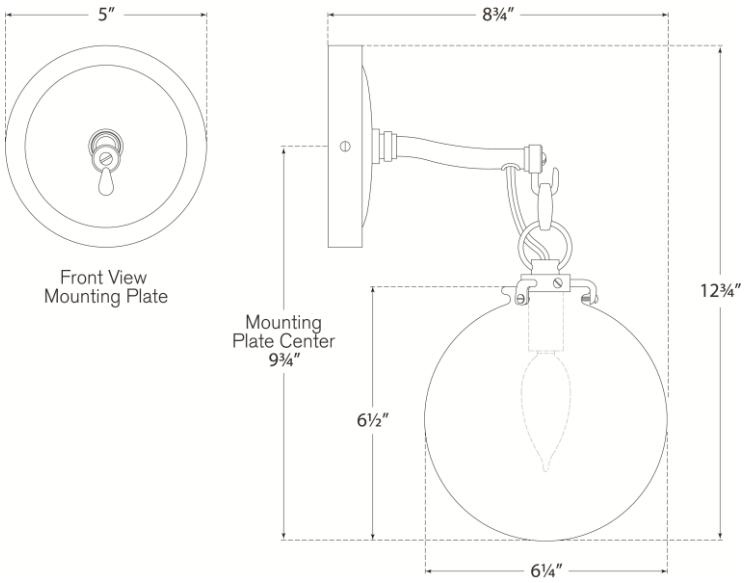

VISUAL COMFORT & CO.

DAMP

4