TEAR SHEET

Academy 15" Larrabee Barn Light

Item # TOB 2804MBK/S2-G

Designer: Thomas O'Brien

Height: 24"
Width: 16"
Extension: 22.75"
Backplate: 4.75" Round
Finishes: HAB, MBK, SC
Shade Treatments: G, HAB, MBK, SC, WHT
Shade Details: 16"
Socket: E26 Keyless
Wattage: 15 LED A19
Weight: 5 Pounds
Note: UL Only

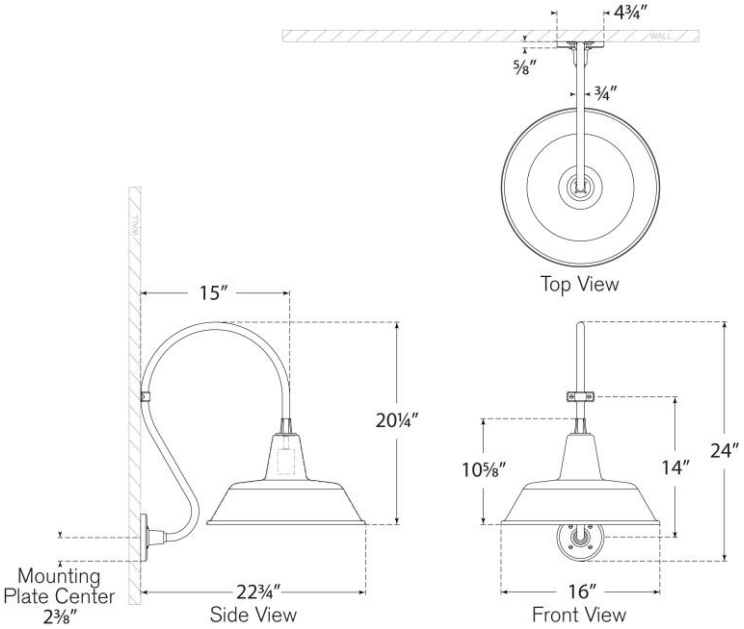

VISUAL COMFORT & CO.