TEAR SHEET

Academy 20" Rex Barn Light

Item # TOB 2809MBK/S4-WHT

Designer: Thomas O'Brien

Height: 23.5"
Width: 16"
Extension: 25"
Backplate: 4.75" Round
Finishes: HAB, MBK, SC
Shade Treatments: G, HAB, MBK, SC, WHT
Shade Details: 16"
Socket: E26 Keyless
Wattage: 15 LED A19
Weight: 5 Pounds
Note: UL Only

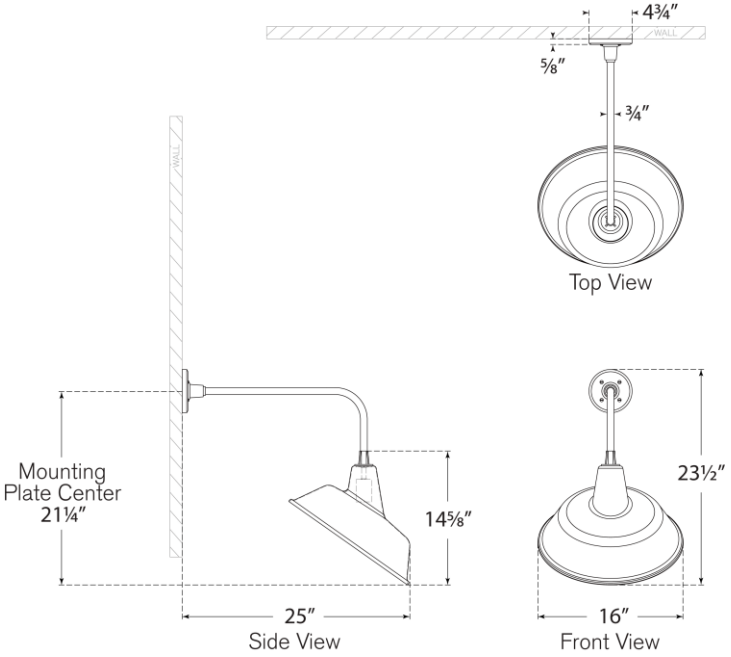

VISUAL COMFORT & CO.