TEAR SHEET

# Bryant 27" Adjustable Cordless Table Lamp

Item # TOB 3107HAB-L-CL

Designer: Thomas O'Brien

Height: 24.5" - 30"
Width: 6"
Base: 4.5" Round
Finishes: BZ, BZ/HAB, HAB, PN
Shade Treatments: L
Shade Details: 4" x 6" x 6.25"
Lightsource: Rechargeable LED w/ Touch Dimmer
Wattage: 1.7w (60 - 250lm)
Weight: 5 Pounds
Note: Rechargeable LED Lightsource and Charging Cable Included

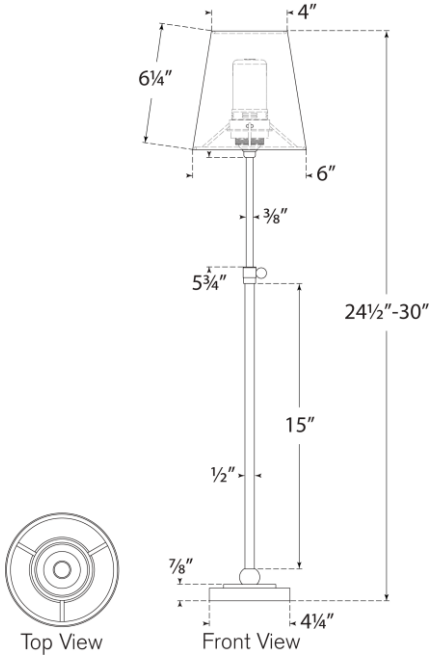


VISUAL COMFORT & CO.

DAMP LED