TEAR SHEET

Garland 15" Dual Lit Ring Semi-Flush Mount

Item # TOB 4520G

Designer: Thomas O'Brien

Height: 6.75"

Width: 15"

Canopy: 5.25" Round

Finishes: AI, G, PN

Lightsource: Dedicated LED

Wattage: 25w (3000lm)

Weight: 6 Pounds

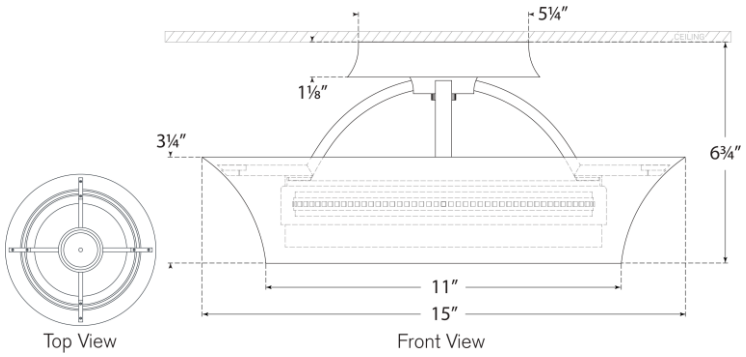

VISUAL COMFORT & CO.

DAMP LED