TEAR SHEET

Goodman Petite Hanging Shade

Item # TOB 5089BZ-TST

Designer: Thomas O'Brien

O/A Height: 37"

Fixture Height: 11"

Min. Custom Height: 20.75"

Width: 9.5"

Canopy: 5" Round

Finishes: AN, BZ, BZ/HAB, HAB

Shade Treatments: AN, ASH, AW, BZ, HAB, L, NAB, TST

Shade Details: 3" x 9.5" x 10"

Socket: E12 Candelabra

Wattage: 60 C11

Weight: 8 Pounds

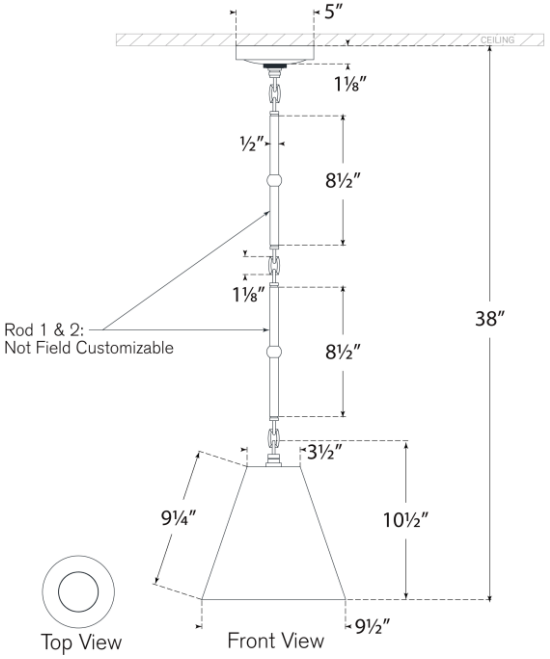

VISUAL COMFORT & CO.