TEAR SHEET

Goodman Medium Hanging Light

Item # TOB 5091BZ-L

Designer: Thomas O'Brien

O/A Height: 43"

Fixture Height: 15.5"

Min. Custom Height: 26.75"

Width: 18"

Canopy: 5" Round

Finishes: AN, BZ, BZ/HAB, HAB

Shade Treatments: AN, ASH, AW, BZ, HAB, L, NAB, TST

Shade Details: 6.5" x 18" x 15.5"

Socket: E26 Keyless

Wattage: 100 A19

Weight: 8 Pounds

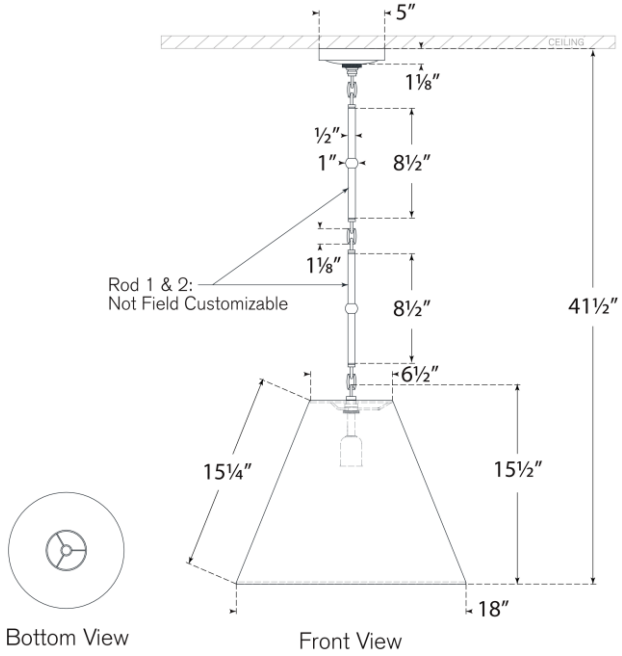

VISUAL COMFORT & CO.