TEAR SHEET

Turlington XL Linear Chandelier

Item # TOB 5728PN-PN

Designer: Thomas O'Brien

O/A Height: 66.25"

Fixture Height: 22"

Min. Custom Height: 29.25"

Width: 12.5" x 68"

Canopy: 5" Round

Finishes: BZ/HAB, HAB, PN

Shade Treatments: BZ, HAB, PN

Shade Details: 6.5" x 12.5" x 5.5"

Socket: 2 - E12 Candelabra

Wattage: 2 - 6.5 LED B11

Weight: 9 Pounds

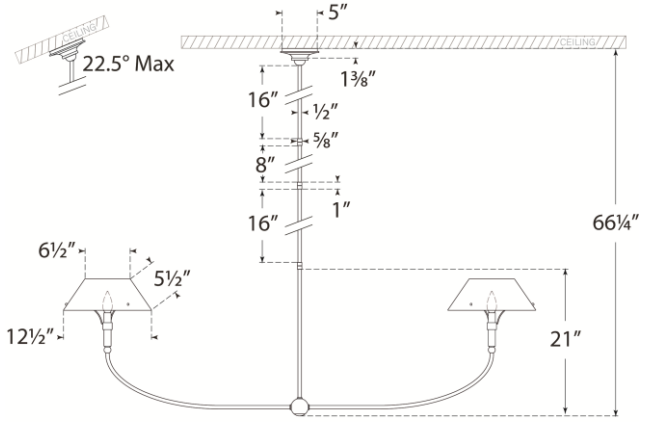

Front View

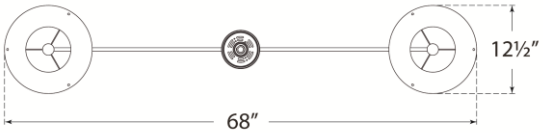

Top View

VISUAL COMFORT & CO.