TEAR SHEET

Academy 12.5" Conical Savannah Pendant

Item # TOB 5819MBK-WHT

Designer: Thomas O'Brien

O/A Height: 56"
Fixture Height: 10.75"
Min. Custom Height: 21.75"
Width: 12.5"
Canopy: 4.5" Round
Finishes: HAB, MBK, SC
Shade Treatments: G, HAB, MBK, SC, WHT
Shade Details: 12.5"
Socket: E26 Keyless
Wattage: 15 LED A19
Weight: 5 Pounds

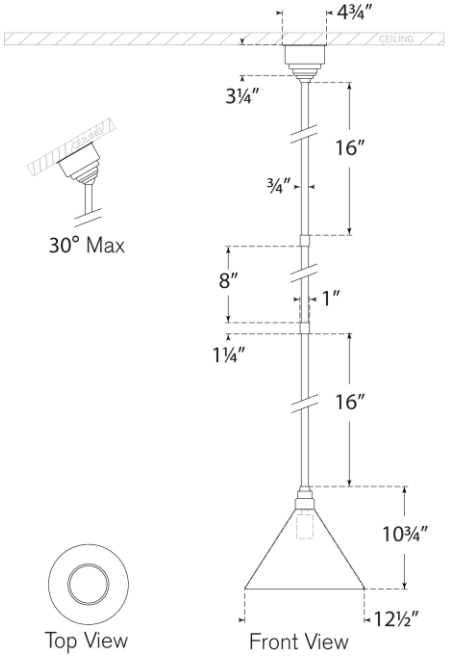

VISUAL COMFORT & CO.