TEAR SHEET

Signature 1.75" Single Cord Swag Mount

Item # VCC6000PN

Designer: Visual Comfort

Height: 1.25"

Width: 1.75"

Finishes: BZ, HAB, PN

Weight: 1 Pound

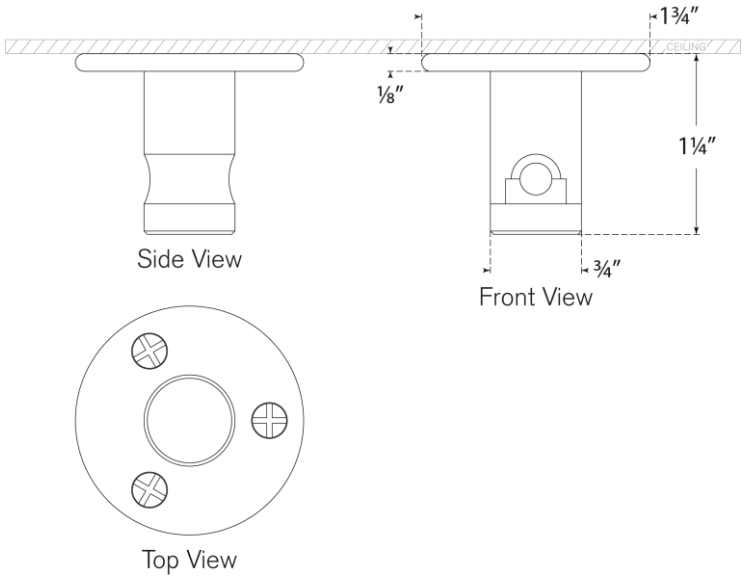

VISUAL COMFORT & CO.